ElectroMagnetic induction

(1) Introduction

While studying magnetism we learned that electricty and magnetism are interrelated and infact moving charges or electric currents produces magnetic field that can deflect magnetic compass needle

A question arises,can moving magnetic field produce electricty .Answer is yes and it was first showed by a british scientist Michael faraday in 1931 who after performing various experiments found that moving magnetic field can give rise to the EMF

Independently the effect was discovered by Joseph Henry in USA at about the same time

In this chapter we will discuss about the electric and magnetic field changing with time

More precisely we will consider the phenomenon related to time changing current or time changing magnetic fields

(2) Faraday's experiment

faraday in 1831 first discovered that whenever the number it of magnetic lines of forces in a circuit changes ,a emf is produced in the circuit and is known as induced emf and this phenomenon is known as Electro Magnetic Induction

If the circuit is closed one then a current flows through it which is known an induced current

This induced emf and current lasts only for the time while magnetic flux is chnaging

We now illustrate two examples of the sort that faraday and henry performed

(i) experiment I

Figure below shows a closed circuit containing coil of insulated wire.

Also note that circuit does not contain any source of emf so there is no deflection in the galvanometer

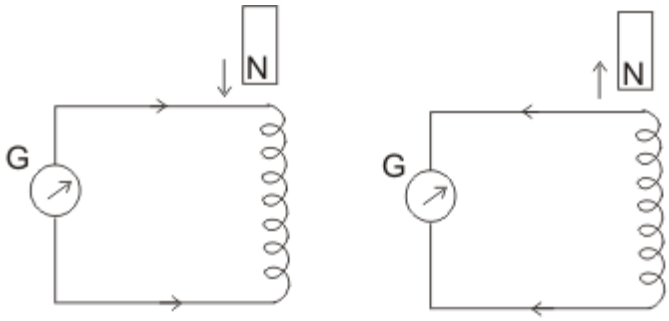

Figure 1. North pole of the magnet moving towards and away from closed circuit containing galvanometer in Faraday's experiment

If we move bar magnet towards the coil keeping the coil stationary with north pole of the magnet facing the coil (say) then we notice deflection in needle of the galvanometer indicating the pressence of the current in the circuit

This deflection observed is only for the time interval during which the magnet is in motion

Now if we begin to move the magnet in the opposite direction then the galvanometer needle is now deflected in the opposite direction

again if we move the magnet towards the coil ,with its south pole facing the coil,the deflection is now in opposite direction,again indicating that the current now setup in the coil is in reverse direction to that when the north pole faces the wire

A deflection is also oberved in galvanometer when the magnet is held stationary and circuit is moved away from the magnet.

It is further observed that faster is the motion of magnet ,larger is the deflection in the galavanometer needle.

From this experiment faraday convinced that magnet moving towards the coil one way has the same effect moving coil towards the magnet the other way.

(ii) experiment -2

Figure-2 given below shows a primary coil P connected to the battery and a secondary coild connected to the galvanometer

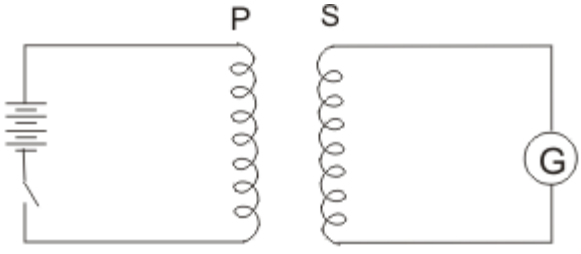

Figure 2. This experiment shows that current flowing in primary coil generated current in secondary coil

Now we have replaced magnet of the previous experiment with a current carrying coil and expect to observe similar effect as current carrying coil produces magnetic field.

The motion of either of the coils shows deflection in the galvanometer.

Also galvanemter shows a sudden deflection in one direction when current was started in primary coil and in

ElectroMagnetic induction

(3) Magnetic Flux

The flux of magnetic field through a surface is defined in a similar manner as we defined flux in the electric field if dA be an area element on any arbitrary surface and **n** be the unit vector perpendicular to the area element then magnetic flux is defined as

$$\phi = \int \mathbf{B}.\mathbf{n}dA \qquad \text{---(1)}$$

If the surface under considerations is a plane of area A and magnetic field is constant in both the magnitude and direction over the surface and θ is the angle between magnetic field **B** and unit normal to the surface then magnetic flux is given by

$$\Phi = BA\cos\theta \qquad \text{--(2)}$$

Unit of flux is Wb(weber)

$1Wb = 1T.m^2$

(4) Faradays law of electromagnetic induction

From experiments on EM induction, faraday came to conclude then an emf was being induced in the coil when the magnetic flux linked to it was being changed either by

(i) Moving magnet close or away from the coil(experiment 1)

(ii) Chnaging amouny of current in the primary coil or motion of either of the coils relative to each other (experiment 2)

From these observations faraday enunciated an important law. The magitude of the induced emf produced in the coil is given by

$$|\xi| = \frac{d\phi}{dt} \qquad \text{---(3)}$$

where Φ is the magnetic flux as given by equation (1) .ξ is expressed in volts

If the circuit is a tightly wound coil of N turns then total flux linked by N turns coil is NΦ.So induced EMF is whole coil is

$$|\xi| = \frac{Nd\phi}{dt} \qquad \text{---(4)}$$

Above equation only give the magnitude of the induced EMF and it does not give its direction.

we know that unit of magnetic flux is 1 weber=1 T.m

If magnetic flux linking a single turn changes at a rate of 1weber per second then Induced emf=Magnetic flux/time=1 weber/sec Now since weber=Nm/Amp

Hence 1 weber/sec= 1 N.m/A.s =1 Joule/coulumb

Hence the unit of emf is volt.

(5) Direction of Induced EMF: Lenz's Law

The direction of induced current and emf is given by lenz's law

Due to change in magnetic flux through a closed loop an induced current is established in the loop

Lenz's law states that

'The induced current due to the induced emf always flow in such a direction as to oppose the change causing it'

Now we can combine faraday's law as given in equation (4) to find the direction of emf

Thus we can say that **"The emf induced in a coil is equal to the negative rate of the change of the magnetic flux linked with it "**

$$\xi = -\frac{Nd\phi}{dt} \qquad \text{---(5)}$$

Explaination of lenz's law

>

To explain this law again consider faradays experiment 1 in which north pole of the magnet moves towards a closed coil

This movement of north pole of magnetic induces current in the coil in such a direction so that end of the coil ,facing and approaching north pole becomes a magnetic north pole

The repulsion between two poles opposes the motion of the magnet towards the coil

Thus work has to be done to push the magnet against the coil

It is this mechanical work which causes the current to flow in the coil against its resistance R and supply the energy for the heat loss

The mechanical workdone is converted to electrical energy which produces the heat energy

If the direction of the induced current were such as not to oppsose the motion ,then we would be obtaining electrical energy continously without doing any work ,which is impossible

So ,every things seems to be all right if we accept lenz's law otherwise the principle of conservation of the energy would be voilated

Direction of the induced current can be found using Fleming right hand rule.

" If we stretch thumb ,index and middle finger perpendicular to one another then index fingers points in direction of the magnetic field ,middle finger in direction of induced current and thum points in direction of the motion of the conducter"

ElectroMagnetic induction

(6) Motional EMF

We know that an emf is produced in the loop when the amount of magnetic flux linked with the circuit os changed.

The flux Φ linked with the loop can be changed by

(i) Keeping the loop at rest and changing the magnetic field i.e , there is no physical movemnt of either the source of emf or the loop(or coil) through which the magnetic flux is linked but the magnetic field changes with time and this may caused by changing the electric current producing the field

(ii) Keeping the magnetic field constant and moving the loop or source of the magnetic field partly or wholey i.e the change is produced by the relative motion of the source of the magnetic field and the lopp (or coil) through which the magnetic field passes.

In both the cases of producing the emf,the induced emf is given by the same law i.e it is equal to the time rate of change of the magnetic flux.

In the later case emf induced due to the relative motion of source of magnetic field and coil is called motional emf.

This phenomemon of motionla emf can be understood easily in lorentz force on moving charges

Consider a thin conducting rod AB length l moving in the magnetic field **B** with constant velocity **v** as shown in the below in the figure

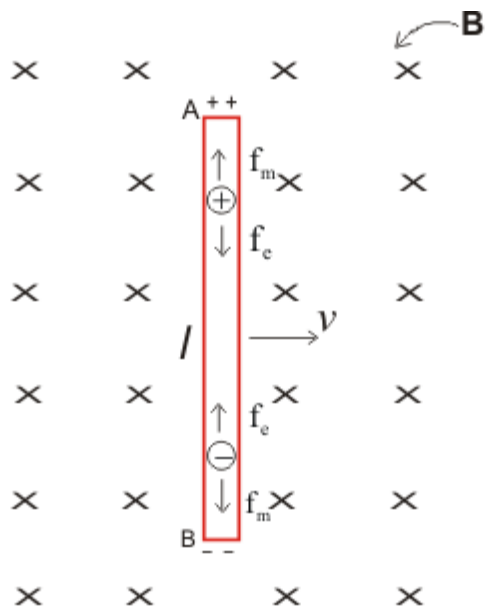

Figure 3. Conducting rod in uniform magnetic field

This uniform magnetic field B is perpendicular to the plane of the diagram ,directed away from the reader

Rod is moving in the magnetic field in such a way that its velocity is perpendicular to the magnetic field **B** and its own axis

when we move conducting rod AB with velocity v,free electrons in it gain velocity in the direction of the motion and in the presence of magnetic field ,these free electrons experiences lorentz force perpendicular to both **B** and **v**

The electrons under this force accumulate at end end ,providing it negative polarity and the other end deprived of the electrons becomes positively charged

Magnetic force or lorentz force F_m acting on these moving electrons is $\mathbf{F_m}=q\mathbf{v} \times \mathbf{B}$

where $q=-1.6*10^{-19}$ C ,charge on each electron

According to fleming left hand rule force on negative charges is towards B hence negative charge accumulates at B and positive charge appears at A

As charges accumulates at the ends of the rod,an electric field E is produced in the rod from A to B.This field E is of non electrostatics origins and is produced by the changing magnetic fields

This electric field in turns produces a force on electron in the conducting rod which is opposite to the lorentz force so

$\mathbf{F_e}=q\mathbf{E}$

when enough charge accumulates a situation comes when this electric force cancels out lorentz force and then free electrons do not drift anymore.In this situation

$F_m = F_e$ or $|q\mathbf{v} \times \mathbf{B}| = |q\mathbf{E}|$ or $vB=E$

In this situation there is no force acting on the free electrons of the rod AB. Potential difference between the ends A and B of the rod would be

$V=El=vBl$ This is the emf induced in the rod AB due to its motion in the magnetic field

Thus motional emf induced in the rod moving in magnetic field is $\xi=vBl$ ----(6)

If the velocity v of the rod makes an angle θ with the direction of the magnetic field ,the potential difference induced between the ends of the conductor will be

$\xi=vBl\sin\theta$

as $v\sin\theta$ is the component of v perpendicular to B

If the rod moves parallel to the field i.e, $\theta=0$ no potential difference will be induced

The emf associated with the moving rod in Figure 3 is analogous to that of a battery with the positive terminal at A and negative terminal at B

If ends of A and B are connected by an external resistor and if r is the internal resistance of the rod then

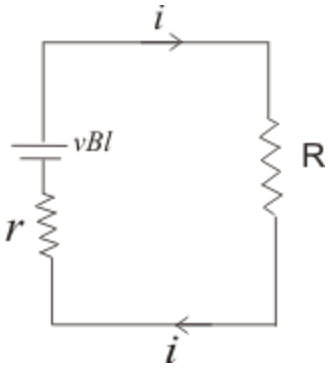

an electric field is produced in this resitor due to the potential differebce and a current is established in the circuit with direction from A to B in the external circuit

Since magnitude of current of induced emf is

ξ=vBl

So current is,

$$i = \frac{vBl}{r+R} \qquad \text{----(7)}$$

and direction of current can be found using lenz's law

We now know the current flowing in the circuit from this we can calculate the power loss and force F connected with this motion Thus

$$P = I^2 R = \frac{B^2 l^2 v^2}{(r+R)^2} R$$

if r <<< R then it can be neglected so

$$P = \frac{B^2 l^2 v^2}{R} \qquad \text{---(8)}$$

and Force

$$F = \frac{P}{v} = \frac{B^2 l^2 v}{R} \qquad \text{---(9)}$$

ElectroMagnetic induction

(7) Induced Electric Fields

In the earliar section we have studied that when a conductor moves in a magnetic field induced current is generated

Now consider a situation in which conductor is fixed in a time varying magnetic field .In this situation magnetic flux through the conducting loop changes with time and an induced current is generated

Figure below shows a soleniod encirceled by a conducting loop with a small galvanometer

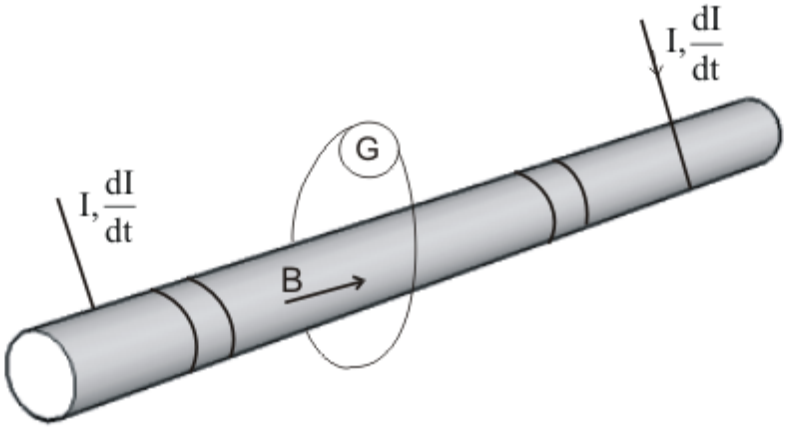

Figure 4. Solenoid with I flowing through its windings and current is changing at a rate dI/dt

Current I through the soleniod sets up a magnetic field B along its axis and a magnetic flux Φ passes through the surface bounded by the loop

Now when the current I through the soleniod changes ,the galvanometer deflects for the time during which the flux is changing .This indicates that an emf is induced in the conductor.

From Faraday's law this emf is given by the relation eq Here as we earliar stated that the conductor is sationary

and the flux through the loop is chnaging due to the magnetic field varying on time

Since charges are at rest (v=0) so magnetic forces $\mathbf{F_m}$=q(**v** X **B**) cannot set the charges to motion.Hence induced current in the loop appears becuase of the presence of an electric field **E** in the loop

It is this electric field **E** which is responsible for the induced emf and hence for the current flowing in a fixed loop placed in a magnetic field varying with time

This electric field produced here is purely a field of nonaelectrostatic origin i.e it originated due to the magnetic field varying with time, and induced emf may be defined as the line integral of this non-electrostatic field .Thus,

$$\xi = \oint \mathbf{E}.d\mathbf{l}$$

Using faraday law

$$\xi = -\frac{d\phi}{dt}$$

So,

$$\oint \mathbf{E}.d\mathbf{l} = -\frac{d\phi}{dt} \qquad \text{---(10)}$$

From equation (10) we see that line intregal of electric field induced by varying magnetic field differs from zero.This means we can not define a electrostatic potential corresponding to this field.

Hence this electric field produced by changing electric field is non-electrostatis and non-conservative in nature. We call such a field as induced electric field.

Inductance

(1) Introduction

Before defining inductance first of all, we will define an inductor.
Like capacitor, inductor is another component commonly in electronic circuits.
An inductor consists of a coil wound on a core or former of a suitable material like solid or laminated iron. core or ferrites which are highly ferromagnetic substances.
when a current through an inductor changes am emf is induced in it which opposes this change of current in the inductor.
This property of inductor or coil due to which it opposes change of current through it called the inductance denoted by letter L.
Unit of inductance is henry(H).

(2) Self Inductance

Consider the figure given below

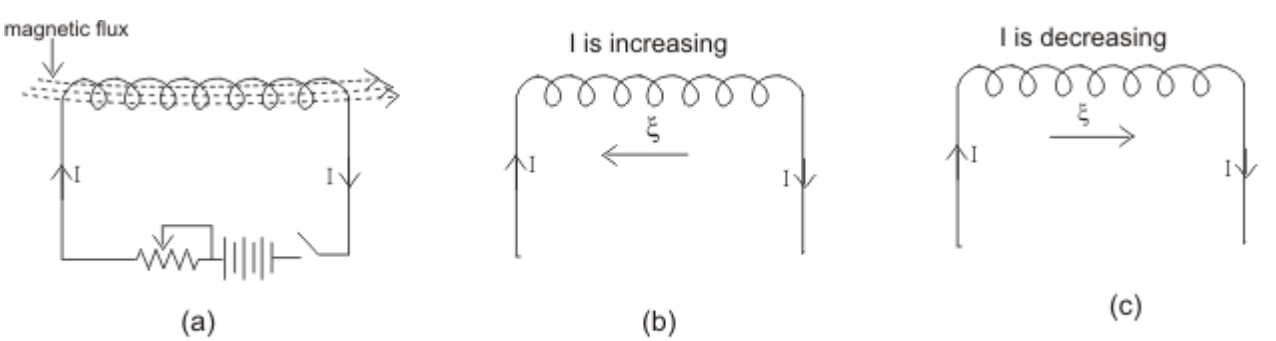

Figure 1. When current increases direction of induced emf is opposite to direction of current (b) and in case of decreasing current direction of induced emf is same as direction of current

When we establish a current through an inductor or coil, it generates a magnetic field and this result in a magnetic flux passing through the coil as shown in figure 1(a).

If we vary the amount of current flowing in the coil with time, the magnetic flux associated with the coil also changes and an emf ξ is induced in the coil.

According to the Lenz□s law, the direction of induced emf is such that it opposes its cause i.e. it opposes the change in current or magnetic flux.

This phenomenon of production of opposing induced emf in inductor or coil itself due to time varying current in the coil is known as self induction.

If I is the amount of current flowing in the coil at any instant then emf induced in the coil is directly proportional to the change in current i.e.

$$\xi \propto \left(\frac{-dI}{dt}\right)$$

or

$$\xi = -L\frac{dI}{dt} \qquad \text{--(1)}$$

where L is a constant known as coefficient of self induction.

If (-dI/dt)=1 then ξ=L

Hence the coefficient of self induction of a inductor or coil is numerically equal to the emf induced in the coil when rate of change of current in the coil is unity.

Now from the faraday's and Lenz□s laws induced emf is

$$\xi = -\frac{d\phi}{dt} \qquad \text{---(2)}$$

comparing equation 1 and 2 we have,

$$L\frac{dI}{dt} = \frac{d\phi}{dt}$$

or Φ=LI

Again for I=1, Φ=L

hence the coefficient of self induction of coil is also numerically equal to the magnetic flux linked with the inductor carrying a current of one ampere

If the coil has N number of turn□s then total flux through the coil is

$\Phi_{tot}=N\Phi$

where Φ is the flux through single turn of the coil .So we have,

$\Phi_{tot}=LI$

or L=NΦ/I

for a coil of N turns

In the figure given below consider the inductor to be the part of a circuit and current flowing in the inductor from left to right

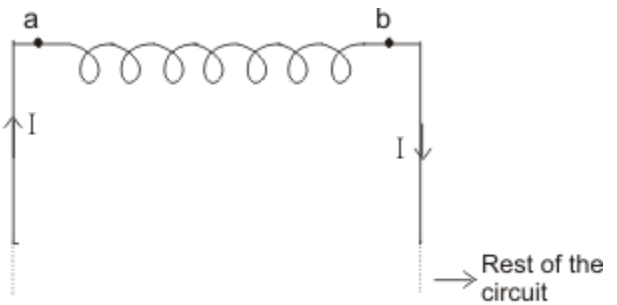

Figure 2. Inductor as the part of a circuit

Now when a inductor is used in a circuit, we can use Kirchhoff□s loop rule and this emf(Self induced emf) can be treated as if it is a potential drop with point A at higher potential and B at lower potential when current flows from a to b as shown in the figure

We thus have

V_{ab}=LdI/dt

(3) Self induction of a long solenoid

Consider a long solenoid of length l, area of cross-section A and having N closely wound turns.

If I is the amount of current flowing through the solenoid them magnetic field **B** inside the solenoid is given by,

$$B = \frac{\mu_0 NI}{l}$$

Magnetic flux through each turn of the solenoid is,

$$\phi = BA = \frac{\mu_0 N^2 AI}{l}$$

$$\text{but}, \phi = LI$$

$$\text{So}, LI = \frac{\mu_0 N^2 AI}{l}$$

or, coefficent of self induction

$$L = \frac{\mu_0 N^2 A}{l} \qquad (3)$$

(4) Energy in an inductor

Changing current in an inductor gives rise to self induced emf which opposes changes in the current flowing through the inductor.

This self inductance thus plays the role the inertia and it is electromagnetic analogue of mass in mechanics.

So a certain amount of work is required to be done against this self induced emf for establishing the current in the circuit.

In order to do so, the source supplying current in a circuit must maintain Potential difference between its terminals which is done by supplying energy to the inductor.

Power supplied to the inductor is given by relation

P=ξI ---(4)

where

$$\xi = -L\frac{dI}{dt}$$

L is Self inductance and

dI/dt is rate of change of current I in the circuit.

Energy dW supplied in time dt would be

dW=Pdt

=LI(dI/dt) dt

=LIdI

and total energy supplied while current I increases from o to a final value I is

$$W = L\int_0^I IdI = \frac{1}{2}LI^2 \qquad \text{----(5)}$$

Once the current reaches its final value and becomes steady ,the power input becomes zero.

The energy so far supplied to the inductor is stored in it as a form of potential energy as long as current is maintained.

When current in circuit becomes zero, the energy is returned to the circuit which supplies it.

Inductance

(5) Growth and decay of current in L-R circuit

Figure below shows a circuit containing resistance R and inductance L connected in series combination through a battery of constant emf E through a two way switch S

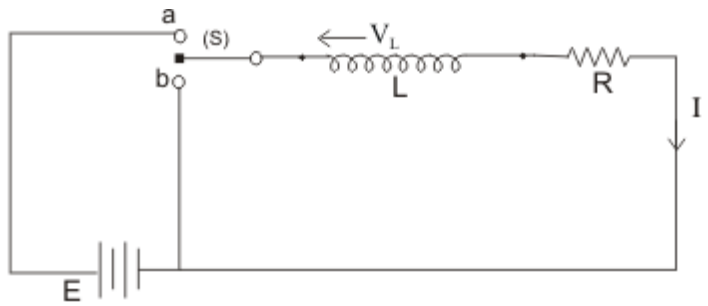

Figure 3. Circuit containing resistor and inductor

To distinguish the effects of R and L,we consider the inductor in the circuit as resistance less and resistance R as non-inductive

Current in the circuit increases when the key is pressed and decreases when it is thrown to b

(A) Growth of current

Suppose in the beginning we close the switch in the up position as shown in below in the figure

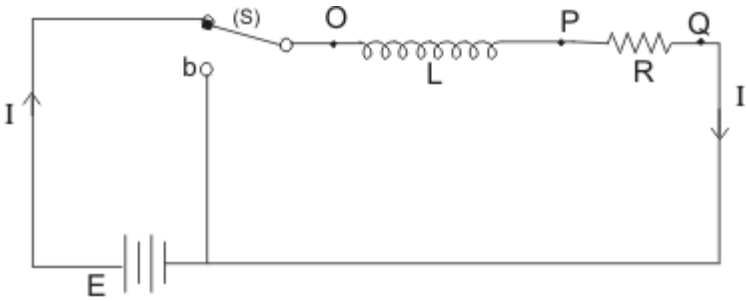

Figure 4. Battery is included in the circuit

Switch is now closed and battery E,inductance L and resistance R are now connected in series
Because of self induced emf current will not immediately reach its steady value but grows at a rate depending on inductance and resistance of the c circuit
Let at any instant I be the c current in the circuit increasing from 0 to a maximum value at a rate of increase dI/dt
Now the potential difference across the inductor is
V_{op}=LdI/dt
and across resistor is
V_{pq}=IR
Since
V=V_{op}+V_{pq}
so we have,

$$V = L\frac{dI}{dt} + IR \qquad \text{----(6)}$$

Thus rate of increase of current would be,

$$\frac{dI}{dt} = \frac{V - IR}{L} \qquad \text{---(7)}$$

In the beginning at t=0 when circuit is first closed current begins to grow at a rate,

$$\left(\frac{dI}{dt}\right)_{t=0} = \frac{V}{L}$$

from the above relation we conclude that greater would be the inductance of the inductor, more slowly the current starts to increase.
When the current reaches its steady state value I ,the rate of increase of current becomes zero then from equation (7) we have,
0=(V-IR)/L
or,
I=V/R
From this we conclude that final steady state current in the circuit does not depend on self inductance rather it is same as it would be if only resistance is connected to the source
Now we will obtain the relation of current as a function of time Again consider equation (6) and rearrange it so that

$$\frac{dI}{\left(\frac{V}{R}\right)-I}=\frac{R}{L}dt$$

let $V/R=I_{max}$,the maximum current in the circuit .so we have

$$\frac{dI}{I_{max}-I}=\frac{R}{L}dt \qquad \text{----(8)}$$

Integrating equation (8) on both sides we have

$$-\ln(I_{max}-I)=\frac{R}{L}t+C \qquad \text{---(9)}$$

where C is a constant and is evaluated by the value for current at t=0 which is i=0

so,

$C=-\ln(V/R)=-\ln I_{max}$

putting this value of C in equation (9) we get,

$$\ln\left(\frac{I_{max}-I}{I_{max}}\right)=-\frac{R}{L}t$$

Or,

$$\frac{I_{max}-I}{I_{max}}=e^{-\frac{R}{L}t}$$

Or,

$$I=I_{max}(1-e^{-\frac{R}{L}t}) \qquad \text{---(10)}$$

This equation shows the exponential increase of current in the circuit with the passage of time

Figure below shows the plot of current versus time

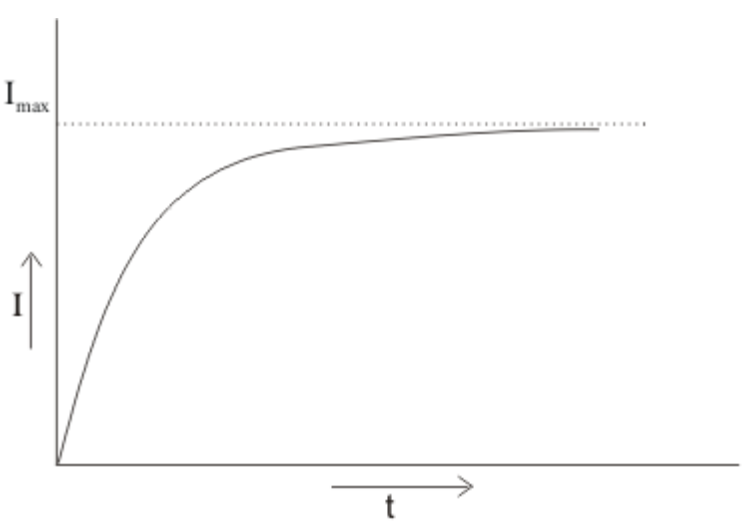

Figure 5. Growth of current in circuit containing inductance and resistance

If we put $t=\tau_L=L/R$ is equation 10 then,

$$I = I_{max}(1-\frac{1}{e}) = .63 I_{max}$$

Hence, the time in which the current in the circuit increases from zero to 63% of the maximum value of I_{max} is called the constant or the decay constant of the circuit.

For LR circuit, decay constant is,

$\tau_L=L/R$ ---(11)

Again from equation (8),

$$\frac{dI}{dt} = \frac{R}{L}(I_{max} - I_0) = \frac{I_{max} - I_0}{\tau_L}$$

Or,

$$\frac{dI}{dt} \alpha \frac{1}{\tau_L}$$

This suggests that rate of change current per sec depends on time constant.

Higher is the value of decay constant ,lower will be the rate of change of current and vice versa.

(B) Decay of current

When the switch S is thrown down to b as shown below in the figure ,the L-R circuit is again closed and battery is cut off

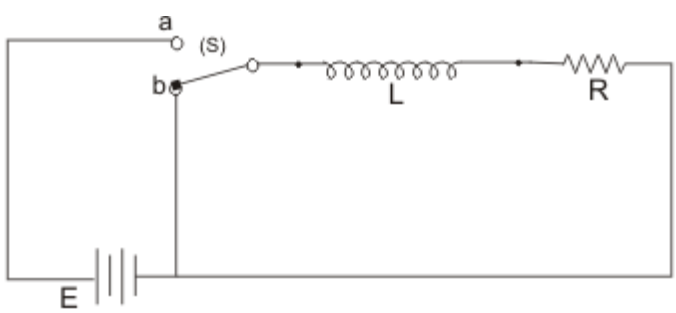

Figure 6. Battery is now cut off from the circuit

In this condition the current in the circuit begins to decay

Again from equation (8) since V=0 this time, so the equation for decay is

$$L\frac{dI}{dt} + RI = 0$$

Or,

$$\frac{dI}{I} = \frac{-R}{L}dt$$

Integrating on both sides

$$\int \frac{dI}{I} = \frac{-R}{L}\int dt$$

Or,

$$\ln I = \frac{-R}{L}t + C_1 \qquad \text{----(12)}$$

In this case initially at time t=0 current $I=I_{max}$ so

$C_1=\ln I_0$

Putting this value of C_1 in equation (12)

$$\ln I = \frac{-R}{L}t + \ln I_{max}$$

Or,

$$I = I_{max}e^{-\frac{R}{L}t} \qquad \text{---(13)}$$

Hence current decreases exponentially with time in the circuit in accordance with the above equation after the battery are cutoff from the circuit.

Figure below shows the graph between current and time

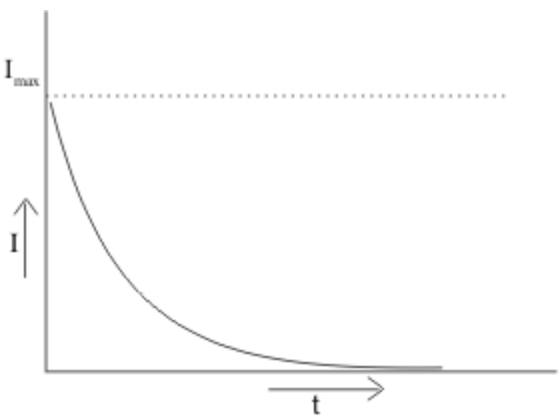

Figure 7. Current decreasing exponentially with time

If in equation (13)

$t=\tau_L=L/R$

then

$I=I_{max}e^{-1}=.37I_{max}$

hence the time in which the current decrease from the maximum value to 37% of the maximum value I_{max} is called the time constant of the circuit

From equation (13) it is clear that when R is large ,current in the L-R circuit will decrease rapidly and there is a chance of production of spark

To avoid this situation L is kept large enough to make L/R large so that current can decrease slowly

For large time constant the decay is slow and for small time constant the decay is fast

Inductance

(6) The R-C circuit

Consider a circuit containing a capacitor of capacitance C and a resistor R connected to a constant source of emf (battery) through a key (K) as shown below in the figure

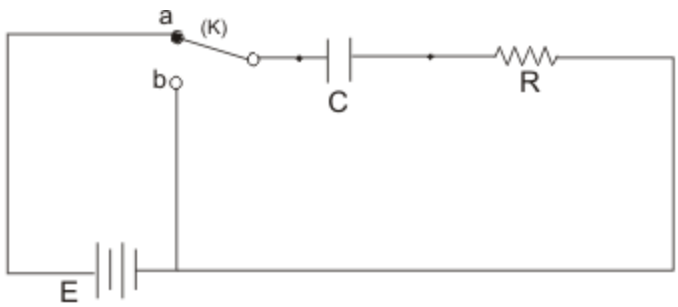

Figure 8. Circuit containing capacitor and resistor

Source of EMF E can be included or excluded from circuit using this two way key

(A) Growth of charge

when the battery is included in the circuit by throwing the switch to a, the capacitor gradually begins to charge and because of this capacitor current in the circuit will vary with time

There are two factors which contributes to voltage drop V across the circuit i.e. if current I flows through resistor R,voltage drop across the resistor is IR and if there is a charge Q on the capacitor then voltage drop across it would be Q/C

At any instant, instantaneous potential difference across capacitor and resistor are

V_R=IR and V_C=q/C

Therefore total potential difference drop across circuit is

$V=V_R+V_C=IR+q/C$

Where V is a constant

Now current is circuit

$$I=\frac{V}{R}-\frac{q}{RC} \qquad \text{-----(14)}$$

Initially at time t=0 ,when the connection was made, charge on the capacitor q=0 and initial current in the circuit would be I_{max}=V/R ,which would be the steady current in the circuit in the absence of the capacitor

As the charge q on the capacitor increase ,the term q/RC becomes larger and current decreases until it becomes zero .Hence for I=0

V/R=q/RC

or $q=CV=Q_f$

where Q_f is the final charge on the capacitor

Again consider equation (14)

$$I = \frac{V}{R} - \frac{q}{RC}$$

we know that I=dq/dt

So,

$$R\frac{dq}{dt} + \frac{q}{C} = V$$

rearranging this equation we get

$$\frac{dq}{VC - q} = \frac{dt}{RC}$$

Integrating this we get

$$t = -CR\ln(VC - q) + A$$

Where A is the constant of integration

Now at t=0,q=0 So

A=CRlnCV

From this we have

$$t = -CR\ln(CV - q) + CR\ln CV$$

As CV=Q_f so,

$$\frac{-t}{CR} = \ln\left(\frac{CV - q}{CV}\right)$$

Or,

$$\frac{-t}{CR} = \ln\left(\frac{Q_f - q}{Q_f}\right)$$

$$q = Q_f(1 - e^{-t/CR}) \qquad \text{---(15)}$$

Where Q_f=CV as defined earlier is the final charge on the capacitor when potential difference across it becomes equal to applied to EMF

Equation (15) represents the growth of charge on the capacitor and shows that it grows exponentially as shown below in the figure

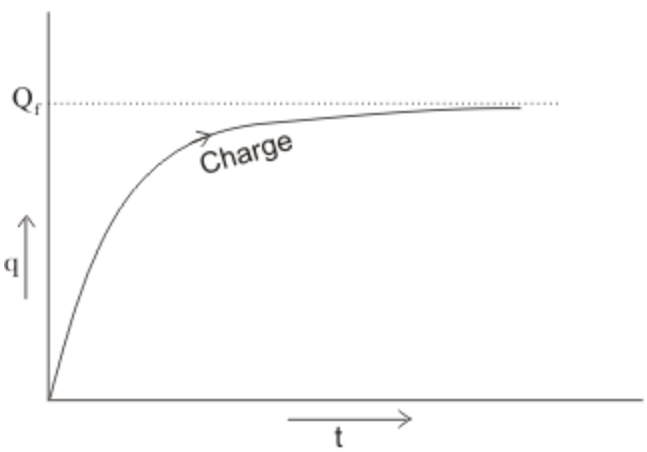

Figure 9. Growth of charge on the capacitor

Now since

$$I = \frac{dq}{dt}$$
$$= \frac{d}{dt}\left[Q_f(1-e^{-t/Rc})\right]$$
$$= Q_f \frac{1}{RC} e^{-t/RC}$$
$$= \frac{V}{R} e^{-t/RC}$$

Again I_{max}=V/R,so we have,

$$I = I_{max} e^{-t/RC} \qquad \text{-----(16)}$$

Thus from equation (16) we see that current decreases exponentially from its maximum value I_{max}=V/R to zero

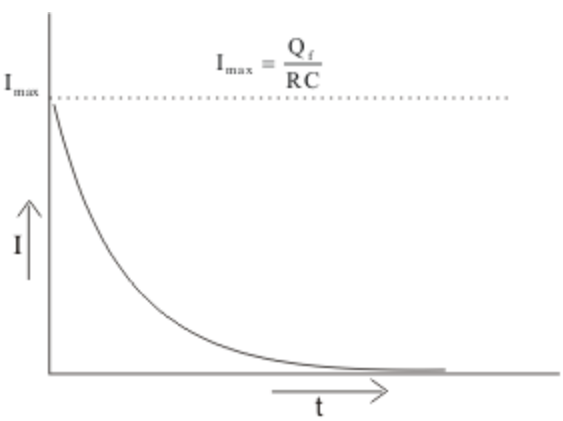

Figure 10. Current decreasing exponentially from its maximum value

Quantity RC in equation (15) and (16) is called capacitive time constant of the circuit

τ_C=CR

Smaller is the value of τ_C,charge will grow on the capacitor more rapidly.

Putting t= τ_C=CR in equation (15)

$q=Q_f(1-e^{-1})$

$=6.32Q_f$

Thus τ_C of CR circuit is the time which the charge on capacitor grows from 0 to .632 of its maximum value

(B) Decay of charge

Again consider figure (8),by throwing the switch(S) to b,we can now exclude the battery from the circuit

After the removal of external emf the charged capacitor now begins to discharge through the resistance R

Putting V=0 in equation (14) we have

I=-q/RC

or dq/dt=-q/RC

$$dt = -CR\frac{dq}{q}$$

On integrating this equation we get

$$t = -CR\ln q + A_1$$

Where A_1 is the constant of integration .Initially at t=0,q=Q_f ,since capacitor is fully charged thus

A_1=CRlnQ_f

Hence

$$t = -CR\ln q + CR\ln Q_f$$

Or,

$$q = Q_f e^{-t/CR} \qquad \text{---(17)}$$

This is the equation governing discharge of capacitor C through resistance R

From equation (17) we see that charge on a capacitor decays exponentianally with time as shown below in the figure

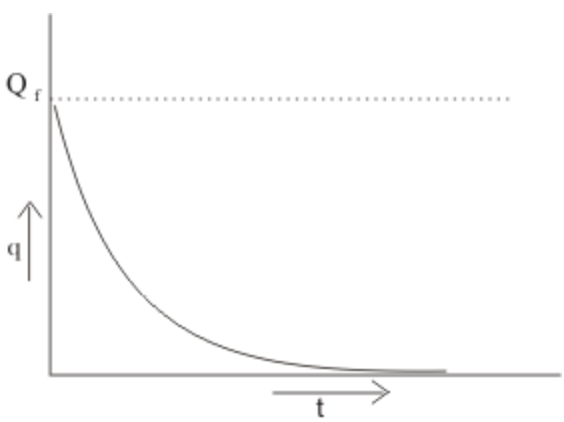

Figure 11. Decay of charge

Current during discharge is obtained by differentiating the equation (17) so,

$$I = \frac{dq}{dt} = Q_f\left(\frac{-1}{CR}\right)e^{-t/CR}$$

$$= \frac{-Q_f}{CR}\frac{q}{Q_f}$$

$$= \frac{-q}{CR}$$

Thus smaller the capacitive time constant ,the quicker is the discharge of the capacitor

Putting t= τ_C=CR in equation (17)

We get

$q=Q_f e^{-1}=Q_f(.368)$

Thus the capacitive time constant can also be defined as the time in which the charge on the capacitor decays from maximum to .368 of the maximum value

Inductance

(7) The L-C circuit

We already know that capacitance and inductor can store electrical and magnetic energy respectively when a charged capacitor is allowed to discharge through an resistance less inductor ,the current oscillates back and forth in the circuit

Thus electrical oscillations of constant amplitude are produced in the circuit and are called L-C oscillations

Let the capacitor of capacitance C be given a charge q_0 and is then connected to an inductor as shown below in the figure

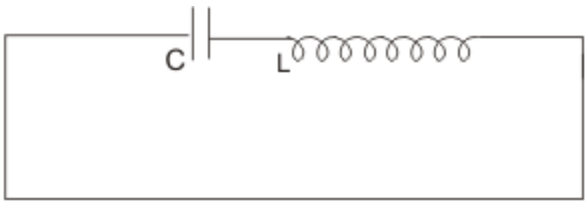

Figure 12. Capacitor C is connected in series with inductor of inductance L

The moment the circuit is completed, charge on the capacitor begins to decrease giving rise to current in the circuit

Suppose at any instant t during the discharge ,q is the amount of charge on the capacitor and I is the current through out the inductor

EMF equation as obtained by Kirchhoff□s second law would be

$$L\frac{dI}{dt}+\frac{q}{C}=0$$

$$\text{using } I=\frac{dq}{dt}$$

$$L\frac{d^2q}{dt^2}+\frac{q}{C}=0$$

$$\text{or, } \frac{d^2q}{dt^2}+\frac{1}{LC}q=0 \qquad \text{---(18)}$$

Comparing equation (18) with the SHM equation for mass spring system i.e.,

$$\frac{d^2x}{dt^2}+\frac{k}{m}x=0$$

Or

$$\frac{d^2x}{dt^2}+\omega^2x=0$$

where ω is the natural angular frequency of oscillations of undampled mass spring system, we can conclude that charge on the circuit oscillate with natural frequency

$$\omega_0 = \frac{1}{\sqrt{LC}} \qquad \text{----(19)}$$

and varies sinusoidal with time as

$$q = q_0 \cos(\omega t + \phi) \qquad \text{--(20)}$$

where q_0 is the maximum value of q and φ is the phase constant .

For initial phase $\varphi=0, q=q_0 \cos\omega t$

We thus see that LC circuit is identical to mass-spring system executing SHM

Time period of oscillations is

$$T = \frac{2\pi}{\omega} = 2\pi\sqrt{LC} \qquad \text{---(21)}$$

and frequency

$$f = \frac{\omega}{2\pi} = \frac{1}{2\pi\sqrt{LC}} \qquad \text{----(22)}$$

The current in the circuit is given by

$$I = \frac{dq}{dt} = -\omega q_0 \sin(\omega t + \phi) \qquad \text{---(23)}$$

Equation(23) indicates that the current in the circuit is also oscillatory and has the same frequency as charge

In an L-C circuit ,during oscillations energy is partly electric and partly magnetic that is the oscillations consists of a transfer of energy back and forth from electric field of capacitor to magnetic field of the inductor

The total energy of the circuit always remain constant and the situation is analogous to the transfer of energy in the mass-spring oscillation where energy alternates between two forms kinetic and potential

Table given below compares the mechanic oscillations of mass spring system with that of electrical oscillations in an L-C circuit

Mechanical mass spring system	Electrical LC circuit
$KE = \frac{1}{2}mv^2$	Magnetic Energy $= \frac{1}{2}LI^2$
$PE = \frac{1}{2}kx^2$	Electrical Energy $= \frac{1}{2}\frac{q^2}{C}$
$\frac{1}{2}mv^2 + \frac{1}{2}kx^2 = \frac{1}{2}kA^2$	$\frac{1}{2}LI^2 + \frac{1}{2}\frac{q^2}{C} = \frac{1}{2}\frac{q_0^2}{C}$
$v = \pm\sqrt{\frac{k}{m}}\sqrt{A^2 - x^2}$	$i = \pm\sqrt{\frac{1}{LC}}\sqrt{q_0^2 - q^2}$
$v = \frac{dx}{dt}$	$i = \frac{dq}{dt}$
$x = A\cos(\omega t + \phi)$	$q = q_0\cos(\omega t + \phi)$
$v = -\omega A\sin(\omega t + \phi)$	$i = -\omega q_0\sin(\omega t + \phi)$

(8) Mutual Inductance

Consider two coils 1 and 2 placed near each other as shown below in the figure

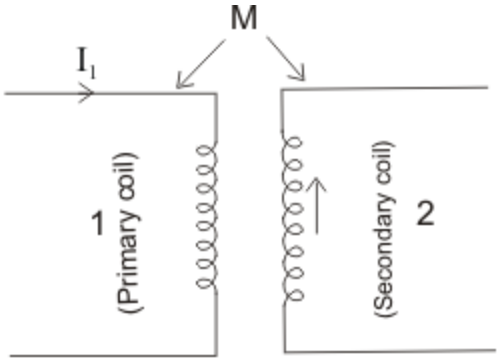

Figure 13. Two coils placed near each other

Let coil 1 be the primary coil and coil 2 be secondary coil

When current is primary coil changes w.r.t time then the magnetic field produced in the coil also changes with time which causes a change in magnetic flux associated with secondary coil

Due to this change of flux linked with secondary coil an emf is induced in it and this phenomenon is known as mutual induction

Similarly change in current in secondary coil induces an emf in primary coild.This way as a result of mutual inductance emf is induced in both the coils

If I_1 is the current in primary coil at any instant ,than the emf induced in secondary coil would be proportional to the rate of change of current in primary coil i.e.

$$\xi_2 \alpha \frac{dI_1}{dt}$$

Or

$$\xi_2 = -M\frac{dI_1}{dt} \qquad \text{----(24)}$$

Where M is a constant known as coefficient of mutual induction and minus sign indicates that direction of induced emf is such that it opposes the change of current in primary coil

Unit of mutual inductance is Henry

We know that a magnetic flux is produced in primary coil due to the flow of current I_1.If this is the magnetic flux associated with secondary coil then from faraday's law of EM induction ,emf induced in secondary coil would be

$$\xi_2 = \frac{-d\phi_{21}}{dt} \qquad \text{---(25)}$$

comparing equation (24) and (25) we get

$$\phi_{21} = M_{21}I_1 \qquad \text{---(26)}$$

Thus coefficient of mutual induction of secondary coil w.r.t primary coil is equal to magnetic flux linked with secondary coil when 1 Ampere of current flows in primary coil and vice-versa

Similarly ,if I_2 is the current in secondary coil at any instant then flux linked with primary coil is

$$\phi_{12} = M_{12} I_2 \qquad \text{---(27)}$$

where M_{12} is coefficient of mutual induction of primary coil with respect to secondary coil

EMF induced in primary coil due to change of this flux is

$$\xi_1 = -M_{12} \frac{dI_2}{dt} \qquad \text{---(28)}$$

For any two circuits

$M_{12}=M_{21}=M$

In general mutual inductance of two coil depends on geometry of the coils (shape ,size, number of turns etc),distance between the coils and nature of material on which the coil is wound

Inductance

(9) Mutual Inductance of two co-axial solenoids

Consider a long solenoid of length l and area of crossection A containing N_p turns in its primary coil

Let a shorter secondary coil having N_2 number of turns be wounded closely over the central portion of primary coil as shown below in the figure.

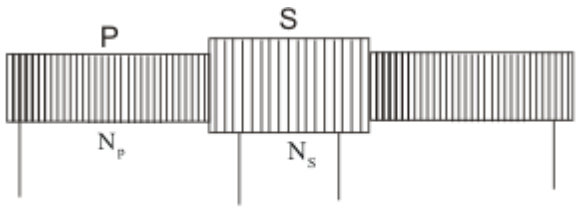

Figure 14. Two co-axial solenoids with secondary coil wounded closely over central portion of primary coil of length l

If I_p is the current in the primary coil then magnetic field due to primary coil would be

$$B = \frac{\mu_0 N_P I_P}{l}$$

So flux through each turn of secondary coil would be

$$\phi_s = \frac{\mu_0 N_P I_P A}{l}$$

where A is the area of crossection of primary coil

Total magnetic flux through secondary coil is

$$\phi_{s(total} = \frac{\mu_0 N_P N_s I_P A}{l}$$

Emf induced in secondary coil is

$$\xi_s = \frac{-d\phi_{s(total)}}{dt} = \frac{-\mu_0 N_p N_S A}{l}\frac{dI_p}{dt}$$

Thus from equation 24

$$\xi_s = -M\frac{dI_p}{dt}$$

So

$$M = \frac{\mu_0 N_p N_S A}{l}$$

(10) Relation between Mutual inductance and self inductance

Consider two coils of same length l and same area of cross-section placed near each other as shown below in the figure

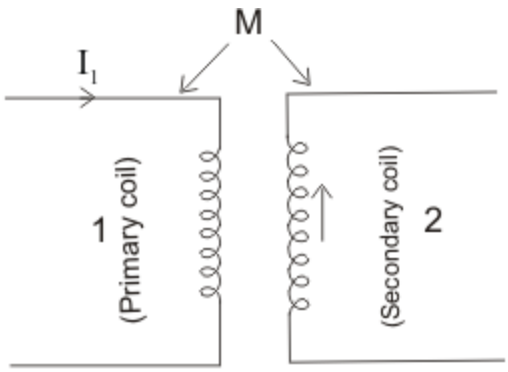

Figure 15. Two coils placed near each other

Let there are N_1 number of turns in primary coil and N_2 number of turns in secondary coil

A current I_1 in the primary coil produces a magnetic field

$$B = \frac{\mu_0 N_1 I_1}{l}$$

which in turns gives rise to flux?

$$\phi_{11} = BN_1A$$
$$= \frac{\mu_0 N_1^2 A I_1}{l}$$

in primary coil and

$$\phi_{21} = BN_2A$$
$$= \frac{\mu_0 N_1 N_2 A I_1}{l}$$

in the secondary coil due to current in primary coil.

By the definition of self induction

$$\phi_{11} = L_1 I_1$$

So

$$L_1 = \frac{\mu_0 N_1^2 A}{l}$$

and by definition of mutual induction

$$\phi_{21} = M_{21} I_1$$

So

$$M_{21} = \frac{\mu_0 N_1 N_2 A}{l}$$

Reversing the procedure if we first introduce the current I_2 in secondary coil then we get

$$L_2 = \frac{\mu_0 N_2^2 A}{l}$$

And

$$M_{12} = \frac{\mu_0 N_1 N_2 A}{l}$$

So L_1 is the self inductance of primary coil,L_2 is the self induction of secondary coil and M_{21}=M_{12}=M is the mutual inductance between two coils

Product of L_1 and L_2 is

$$L_1 L_2 = \frac{\mu_0^2 N_1^2 N_2^2 A^2}{l^2} = M^2$$

hence

$$M = \sqrt{L_1 L_2} \qquad \text{-----(29)}$$

In practice M is always less than eq due to leakage which gives

$$\frac{M}{\sqrt{L_1 L_2}} = k$$

Where K is called coefficient of coupling and K is always less then 1.

SUMMARY

- **Magnetic Flux:**
  Magnetic flux through a plane of area dA placed in a uniform magnetic field B

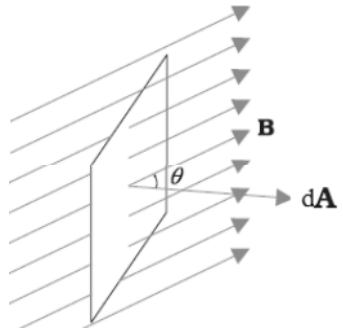

  $$\phi = \int \vec{B}.d\vec{A}$$
  If the surface is closed, then
  $$\phi = \int \vec{B}.d\vec{A}$$
  This is because magnetic lines of force are closed lines and free magnetic poles do not exist.
- **Faraday's Law:**
  a) First Law: whenever there is a change in the magnetic flux linked with a circuit with time, an induced emf is produced in the circuit which lasts as long as the change in magnetic flux continues.
  b) Second Law: According to this law,
  Induced emf, $E \propto \left(\frac{d\phi}{dt}\right)$
- **Lenz's Law:**
  The direction of the induced emf or current in the circuit is such that it opposes the cause due to which it is produced, so that,
  $$E = -N\left(\frac{d\phi}{dt}\right)$$
  Where N is the number of turns in coil
  Lenz's law is based on energy conservation.
- **Induced EMF and Induced Current:**
  a) Induced EMF,
  $$E = -N\frac{d\phi}{dt}$$
  $$= -\frac{N(\phi_2 - \phi_1)}{t}$$
  b) Induced current,
  $$I = \frac{E}{R} = -\frac{N}{R}\left(\frac{d\phi}{dt}\right)$$
  $$= -\frac{N}{R}\frac{(\phi_2 - \phi_1)}{t}$$
  Charge depends only on net change in flux does not depends on time.
- **Induced Emf due to Linear Motion of a Conducting Rod in a Uniform Magnetic Field**
  The induced emf,

$$E = -\vec{l}.(\vec{v} x \vec{B})$$

If $\vec{e}, \vec{v}$ *and* $\vec{B}$ are perpendicular to each other, then

$$E = Bvl$$

- **Induced EMF due to Rotation of a Conducting Rod in a Uniform Magnetic Field:**

The induced emf,

$$E = \frac{1}{2} B\omega l^2 = B\pi n l^2 = BAn$$

Where n is the frequency of rotation of the conducting rod.

- **Induced EMF due to Rotation of a Metallic Disc in a Uniform Magnetic Field:**

$$E_{OA} = \frac{1}{2} B\omega R^2 = B\pi R^2 n = BAn$$

- **Induced EMF, Current and Energy Conservation in a Rectangular Loop Moving in a Non – Uniform Magnetic Field with a Constant Velocity:**

a) The net increase in flux crossing through the coil in time Δt is,

$$\Delta\phi = (B_2 - B_1) lv\Delta t$$

b) Induced emf in the coil is,

$$E = (B_1 - B_2) lv$$

c) If the resistance of the coil is R, then the induced current in the coil is,

$$I = \frac{E}{R} = \frac{(B_1 - B_2)}{R} lv$$

d) Resultant force acting on the coil is

$$F = Il(B_1 - B_2)(\text{ towards left})$$

e) The work done against the resultant force

$$W = (B_1 - B_2)^2 \frac{l^2 v^2}{R} \Delta t \text{ joule}$$

Energy supplied in this process appears in the form of heat energy in the circuit.

f) Energy supplied due to flow of current I in time Δt is,

$$H = I^2 R\Delta t$$

$$Or\ H = (B_1 - B_2)^2 \frac{l^2 v^2}{R} \Delta t \text{ joule}$$

Or H = W

- **Rotation of Rectangular Coil in a Uniform Magnetic Field:**

a) Magnetic flux linked with coil

$$\phi = BAN \cos\theta$$

=BAN cosωt

b) Induced emf in the coil

$$E = \frac{d\phi}{dt} = BAN\omega \sin \omega t = E_0 \sin \omega t$$

c) Induced current in the coil.

$$I = \frac{E}{R} = \frac{BAN\omega}{R}\sin\omega t$$

$$= \frac{E_0}{R}\sin\omega t$$

d) Both Emf and current induced in the coil are alternating

- **Self-Induction and Self Inductance:**

a) The phenomenon in which an induced emf is produced by changing the current in a coil is called self in induction.

$$\phi \propto I \text{ or } \phi = LI$$

$$or \text{ L}=\frac{\phi}{I}$$

$$E = -L\frac{dI}{dt}$$

$$L = \frac{E}{-(dI/dt)}$$

where L is a constant, called self inductance or coefficient of self – induction.

b) Self inductance of a circular coil

$$L = \frac{\mu_0 N^2 \pi R}{2} = \frac{\mu_0 N^2 A}{2R}$$

c) Self inductance of a solenoid

$$L = \frac{\mu_0 N^2 A}{l}$$

d) Two coils of self – inductances L_1 and L_2, placed far away (i.e., without coupling) from each other.

i) For series combination:

$$L = L_1 + L_2 \ldots\ldots L_n$$

ii) For parallel combination:

$$\frac{1}{L} = \frac{1}{L_1} + \frac{1}{L_2} + \ldots + \frac{1}{L_n}$$

- **Mutual Induction and Mutual Inductance:**

a) On changing the current in one coil, if the magnetic flux linked with a second coil changes and induced emf is produced in that coil, then this phenomenon is called mutual induction.

$$\phi_2 \propto I_1 \text{ or } \phi_2 = MI_1$$

$$\text{Or } M = \frac{\phi_2}{I_1}$$

$$E_2 = -\frac{d\phi_2}{dt} = -M\frac{dI_1}{dt}$$

$$M = \frac{E_2}{-(dI_1/dt)}$$

Therefore, $M_{12} = M_{21} = M$

b) Mutual inductance two coaxial solenoids

$$M = \frac{\mu_0 N_1 N_2 A}{l}$$

c) If two coils of self- inductance L_1 and L_2 are wound over each other, the mutual inductance is,

$$M = K\sqrt{L_1 L_2}$$

Where K is called coupling constant.

d) Mutual inductance for two coils wound in same direction and connected in series

$$L = L_1 + L_2 + 2M$$

e) Mutual inductance for two coils wound in opposite direction and connected in series

$$L = L_1 + L_2 - 2M$$

f) Mutual inductance for two coils in parallel

$$L = \frac{L_1 L_2 - M^2}{L_1 + L_2 \pm 2M}$$

- **Energy Stored in an Inductor:**

$$U_B = \frac{1}{2} L I^2{}_{\max}$$

- **Magnetic Energy Density:**

$$U_B = \frac{B^2}{2\mu_0}$$

- **Eddy Current:**

When a conductor is moved in a magnetic field, induced currents are generated in the whole volume of the conductor. These currents are called eddy currents.

- **Transformer:**

a) It is a device which changes the magnitude of alternating voltage or current.

$$\frac{E_s}{E_p} = \frac{n_s}{n_p} = K$$

b) For ideal transformer:

$$\frac{I_p}{I_s} = \frac{n_s}{n_p}$$

c) In an ideal transformer:

$$E_p I_p = E_s I_s$$

d) In step – up transformer:

$n_s > n_p$ or K > 1

$E_s > E_p$ and $I_s < I_p$

e) In step – down transformer:

$n_s < n_p$ or K < 1

$E_s < E_p$ and $I_s > I_p$

f) Efficiency

$$\eta = \frac{E_s I_s}{E_p I_p} x100\%$$

- **Generator or Dynamo:**

  It is a device by which mechanical energy is converted into electrical energy. It is based on the principle of electromagnetic induction.

- **Different Types of Generator:**

a) AC Generator

It consists of field magnet, armature, slip rings and brushes.

b) DC Generator

It consists of field magnet, armature, commutator and brushes.

- **Motor:**

  It is a device which converts electrical energy into mechanical energy.

  Back emf $e \propto \omega$

  Current flowing in the coil,

$$i_a = \frac{E - e_b}{R}$$

$$E = e_b + i_a R$$

Where R is the resistance of the coil.

Out put Power = $i_a e_b$

Efficiency,

$$\eta = \frac{e_b}{E} \times 100\%$$